SHEPHERD
MICRO RACING TEAM

VELOX 8.3

NAME	Friedrich
DATE	3.8.25
EVENT	SK Mitte
TRACK	Kirchhain
AIR TEMP	19
TRACTION	Medium
BEST LAP	12,7

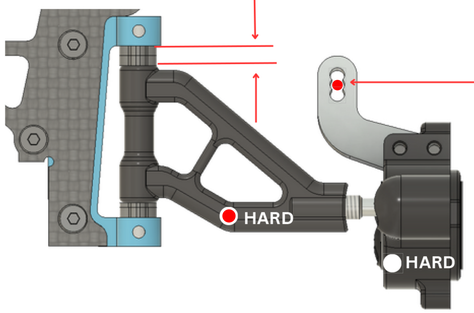

CASTER 4.0 mm

UPRIGHT INSERTS: CENTRIC ○ EXCENTRIC ✔

BUMP STEER 1.0 mm

FRONT ONEWAY POSITION

	HIGH		
BELT	210mm ○	210mm ●	207mm ○
FRONT — REAR			
BELT	210mm ○	210mm ●	207mm ✔
		LOW ○	

ACTIVE ○ SHIM ___ mm

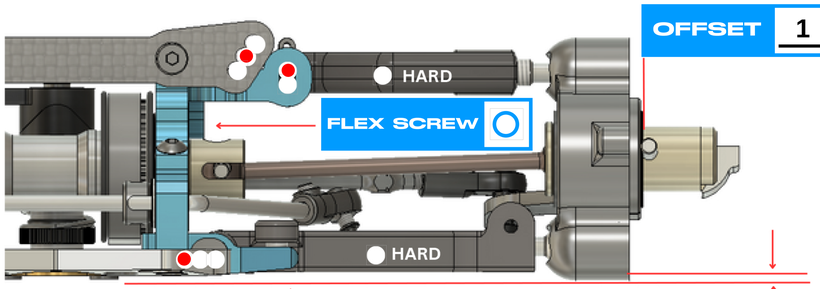

FLEX SCREW ○

OFFSET 1.0 mm

RIDE HEIGHT 8.0 mm

DOWNSTOP 1.0 mm

WHEELBASE: LONG ○ SHORT ✔

TOE IN/OUT 1.5°

CAMBER LEFT 1.8°

WIDTH 252 mm

CAMBER RIGHT 2.0°

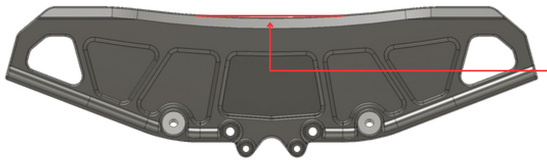

BODY: Hyper Diablo

DISTANCE TO BUMPER: PC mm

AWS BATTERY TRAY ✔

CARBON ✔ BRASS ○ | CARBON ○ BRASS ○ | CARBON ○ BRASS ○

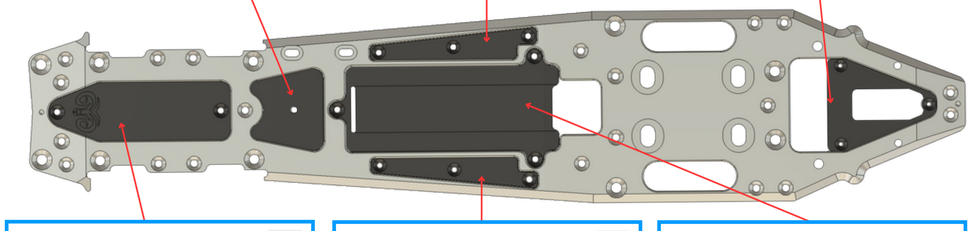

CARBON ○ BRASS ○ | CARBON ○ BRASS ○ | CARBON ○ BRASS ✔

FRONT / REAR

FRONT LEFT	FRONT RIGHT	TYRES	REAR LEFT	REAR RIGHT
Matrix i	Matrix	BRAND	Matrix	Matrix
32	32	SHORE	35	35
69	69	DIAMETER	76	76
		ADDITIVE		

SHOCKS

Mugen weiß	SPRINGS	Mugen Weiß
650	OIL	800
	PISTON	
1x1.2	HOLE	2x1.2
Std	FP SPRING	Std

ANTI-ROLL BAR

FRONT 2,3 mm REAR 2,8 mm

FRONT AXLE

SOLID ○ SPLIT ○ 90 DEG ○ STR ●

CLUTCH

TYPE	Std.
SHOE	Yellow
PRELOAD	BM 1.3
GAP	0,6

GEAR RATIO

1ST 19 / 24 2ND 61 / 57

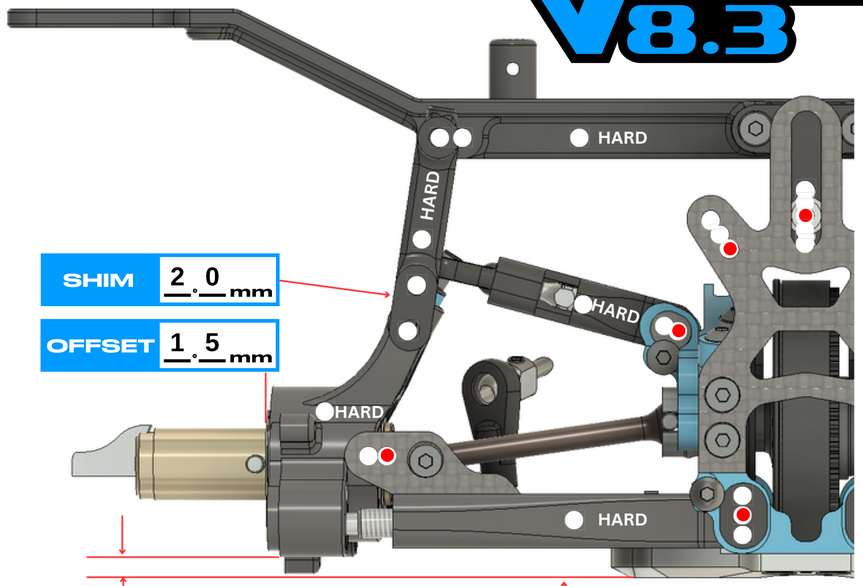

SHIM 2.0 mm

OFFSET 1.5 mm

DOWNSTOP 8.0 mm

RIDE HEIGHT 9.0 mm

CAMBER LEFT 3.2°

TOE IN/OUT 3.0°

CAMBER RIGHT 3.2°

WIDTH 261 mm

LONG ○ MEDIUM ✔ SHORT ○

8mm ○ 9mm ● 10mm ○

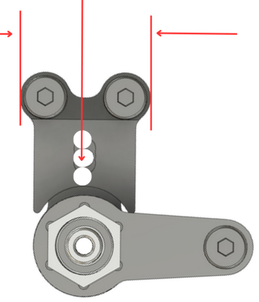

UPRIGHT INSERTS: F ○ R ◉

AERO DISCS: F ○ R ○

ENGINE	PSS Picco	PIPE	Hipex 2069 evo3
MANIFOLD	M321P	GLOWPLUG	7
FUEL			

NOTES